DRAPER®
THE TOOL COMPANY

AIR STAPLER KIT

■ STOCK No.57555. ■ PART No.AS8-25.

SPARE PARTS LISTING 12/99

KEY No.	PART No.	STOCK No.	DESCRIPTION
1	YAS-HS0520B	60793	Bolt
2	YAS-SW0500W	60794	Spring washer
3	YAS-11100302	60840	Cap
4	YAS-12100401	60796	Seal
5	YAS-12100501	60797	Spring
6	YAS-0R1425R	60798	O-ring
7	YAS-11100701	60876	Cap seal
8A	YAS-12100801A	60868	Piston head assy.
8	YAS-12100801	60800	Piston head valve
9	YAS-0R2535R	60801	O-ring
10	YAS-12101001	60802	Stopper
11	YAS-0R3224R	60803	O-ring
13	YAS-0R2331R	60805	O-ring
14A-1	YAS-11301401A	60997	Driver assy
18	YAS-0R4630R	60884	O-ring
19	YAS-11101902	60929	Cylinder
19-1	YAS-11101903	60930	Collar
20	YAS-11002001	60931	Bumper
21	YAS-0R3018R	60932	O-ring
23	YAS-11102309	60890	Body
24	YAS-0R1919H	60815	O-ring
25	YAS-12102501	60818	Joint guide
26	YAS-11002601	60819	Spring
27	YAS-11002702	60820	Guide safety lever
31	YAS-11303101	60998	Safety lever
32	YAS-12103202	60827	Stepped pin
35A-1	YAS-0R0319R	60828	O-ring
35A-2	YAS-11003401	60829	Trigger valve head
35A-3	YAS-11006901	60830	Spring
35A-4	YAS-11003503	60934	Trigger valve stem
35A-5	YAS-0R2515M	60832	O-ring
35A-6	YAS-0R1119R	60895	O-ring
35A-7	YAS-11003803	60833	Travel valve guide
35A-8	YAS-13904501A	60836	Trigger assy
41	YAS-HS0406B	60837	Bolt
42	YAS-11304201	60999	Nose cover
43	YAS-HS0412B	60901	Bolt
44	YAS-HS0520B	60793	Bolt

KEY No.	PART No.	STOCK No.	DESCRIPTION
45	YAS-SW0500W	60794	Spring washer
46	YAS-11304601	61000	Nose
47	YAS-11304701	60984	Set plate
48	YAS-12104501	60900	Set plate
49A	YAS-11304901A	61001	Staple guide unit
50	YAS-11305001	61002	Magazine
51	YAS-11305101	61003	Pusher
52	YAS-11305201	61004	Slide block
53	YAS-11305301	61005	Spring
54	YAS-11305401	60850	Rod
55	YAS-11305501	60851	Shaft
56	YAS-11305601	60853	Set block
57	YAS-11605701	60854	Stepped pin
58	YAS-11605801	60855	End core
59	YAS-US0510B	60856	Bolt
60	YAS-11306001	60857	Spring
61	YAS-11606101	60858	Stopper
62	YAS-ER0200H	60859	E-ring
63	YAS-HS0410B	60860	Bolt
64	YAS-HS0516B	60861	Bolt
65	YAS-LN0500N	60862	Lock nut
66	YAS-11106601	60863	Cover
67	YAS-12106401	60864	Air plug
68	YAS-0R4030R	60865	O-ring
69	YAS-11306901	61006	Bracket
71	YAS-US0506B	60947	Bolt
72	YAS-FW0512W	60948	Washer
73	YAS-12103301	60922	Seal
74	YAS-13907403	60923	Exhaust cover
75	YAS-RP30105	60949	Rolled pin

DRAPER TOOLS LIMITED, HURSLEY ROAD, CHANDLER'S FORD, EASTLEIGH, HAMPSHIRE. SO53 1YF. ENGLAND.

DRAPER®
THE TOOL COMPANY

AIR STAPLER KIT

■ STOCK No.57555. ■ PART No.AS8-25.

PARTS DRAWING 12/99

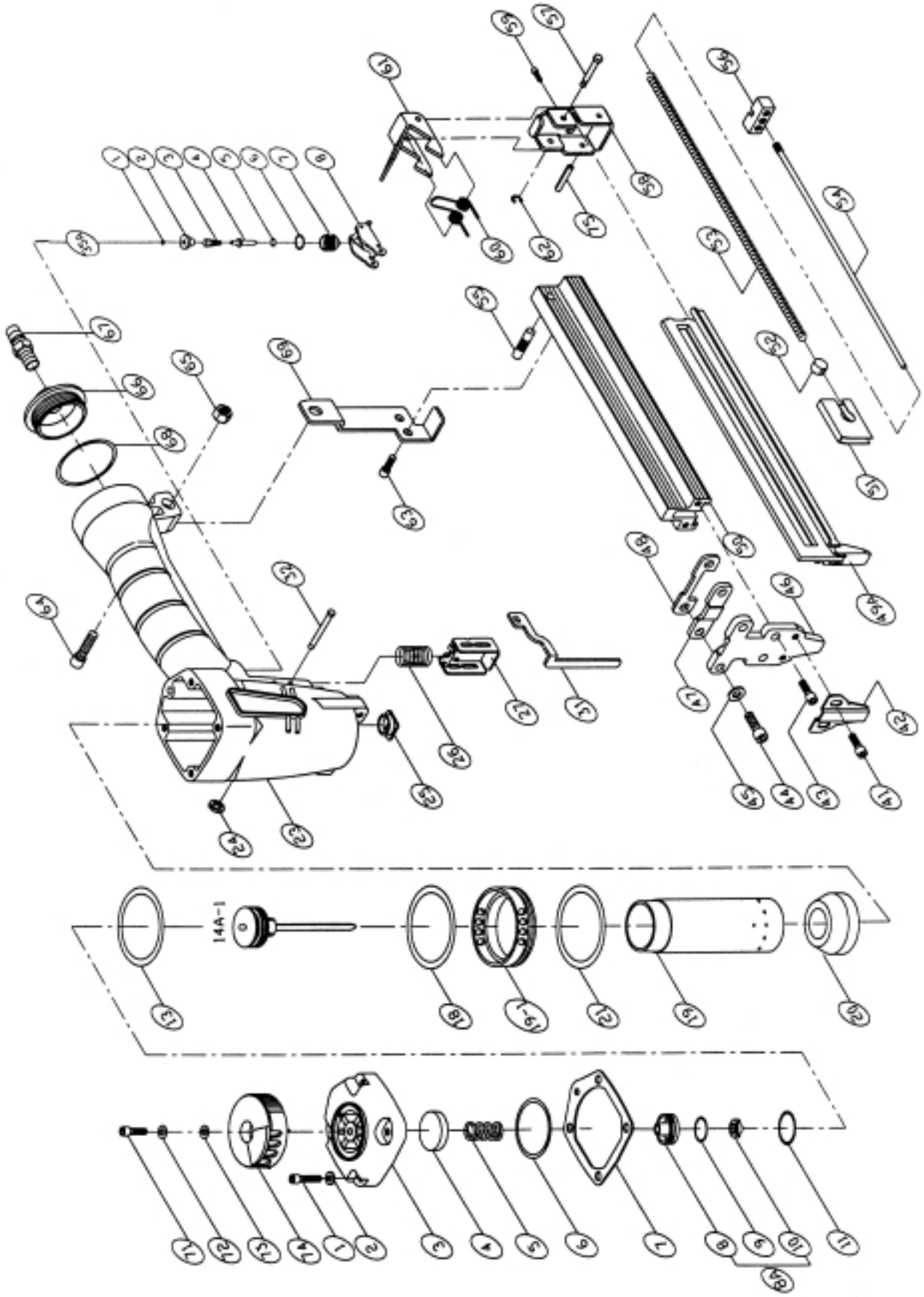

POWER DIVISION HELPLINE: (023) 8049 4344

DRAPER TOOLS LIMITED, HURSLEY ROAD, CHANDLER'S FORD, EASTLEIGH, HAMPSHIRE. SO53 1YF. ENGLAND.