Escalier Hélicoïdal

04 74 28 32 04
contact@matisere.com

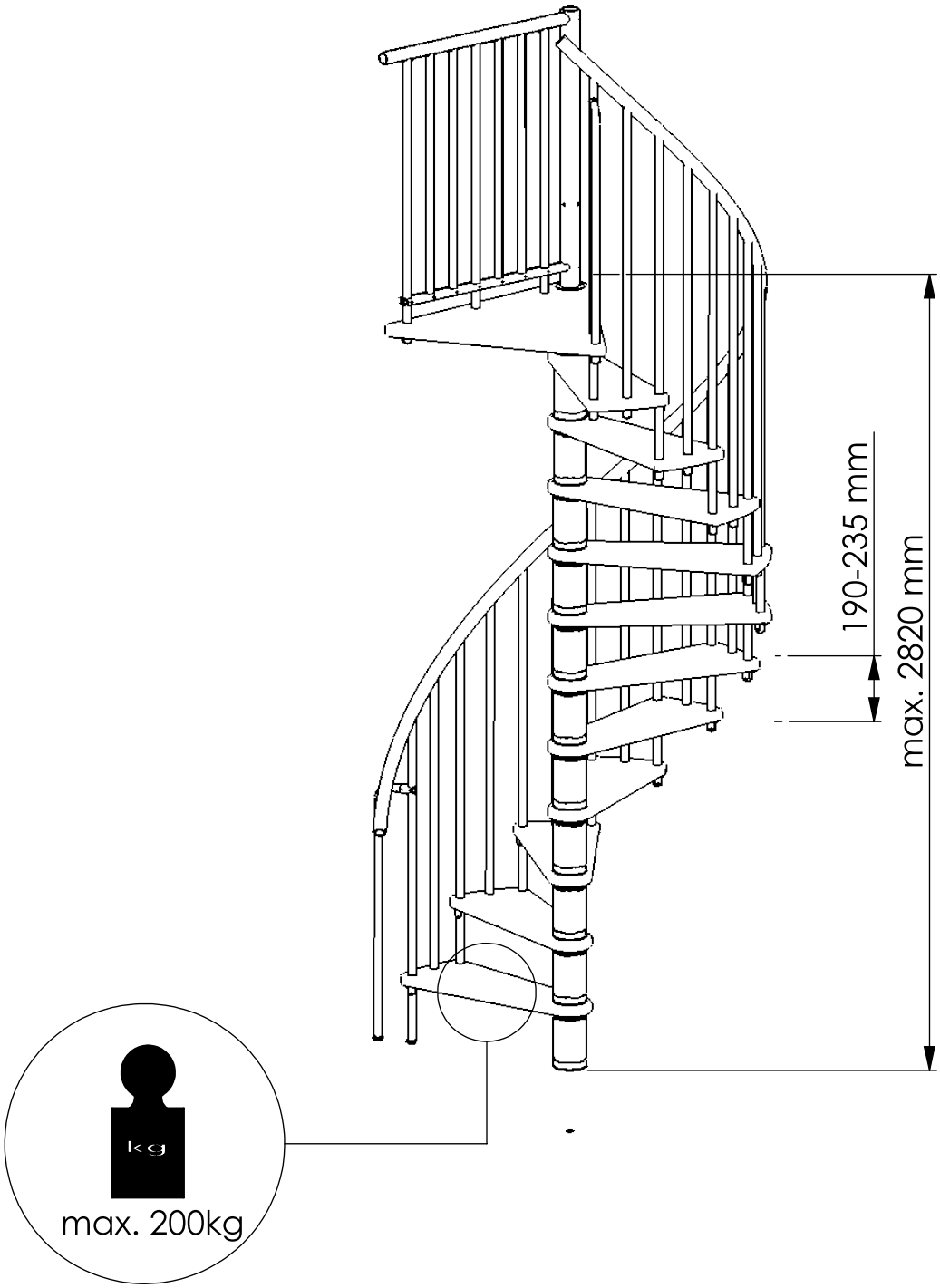

BS01 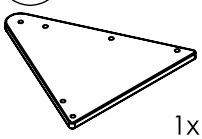 1x	BS02 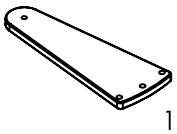 11x	BS03 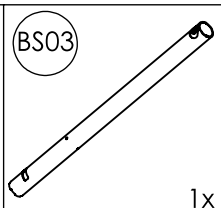 1x ∅ 60 x 1000x4 mm	BS04 1x	BS05 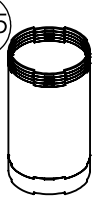 12x ∅ 108x200 mm	BS06 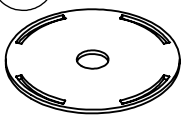 24x ∅ 115 x 3 mm
BS07 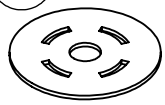 1x ∅ 100 x 3 mm	BS08 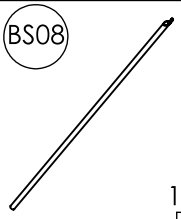 12x ∅ 22x2x1275 mm	BS08a 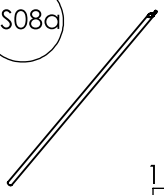 11x ∅ 22x1x1175 mm	BS08b 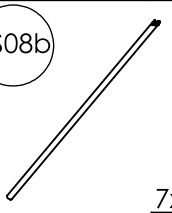 7x ∅ 22x2x1030 mm	BS09 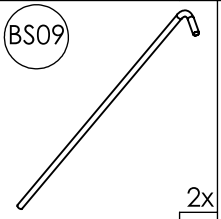 2x ∅ 22x1x913+170mm	BS11 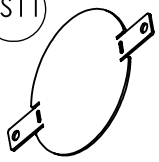 1x ∅ 60 mm
BS12 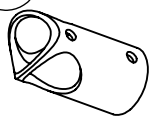 2x ∅ 28x2x50 mm	BS13 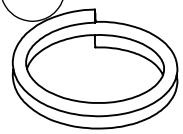 1x ∅ 40x3x6000mm	BS14 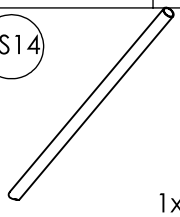 1x ∅ 40x2x975 mm	BS15 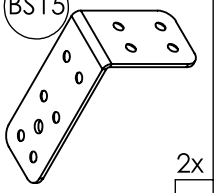 2x	BS16 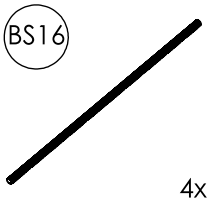 4x M20 x 1000 mm	BS17 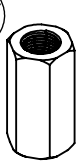 4x M20 DIN 6334
BS19 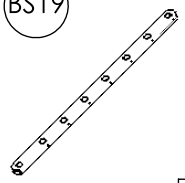 1x	BS20 38x	BS21 76x ∅ 5 x 30 mm	BS22 2x M5 x 6 mm	BS23 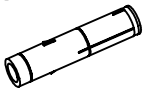 4x ∅ 12 mm	BS24 12x ∅ 8 mm
BS25 62x ∅ 4 x 20 mm	BS26 2x M5 DIN 562	BS27 M20 DIN-EN 24035 7x	BS28 32x ∅ 22 mm	BS29 2x	BS30 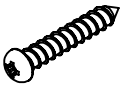 2x ∅ 4 x 50 mm
BS31 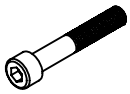 4x M8x50 mm	BS32 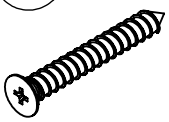 12x ∅ 6x50mm	BS33 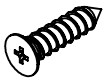 8x ∅ 6x30mm	BS34 2x ∅ 6 mm	BS35 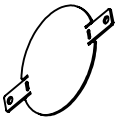 1x ∅ 40 mm	BS36 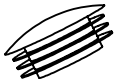 2x ∅ 40 mm
BS37 48x ∅ 4x25mm	BS38 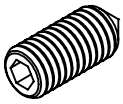 3x M8x20mm				

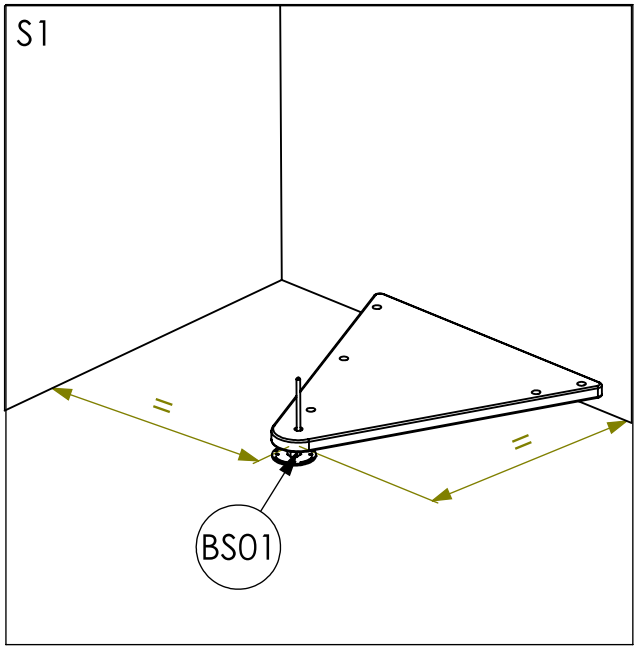
S1
=
=
BS01

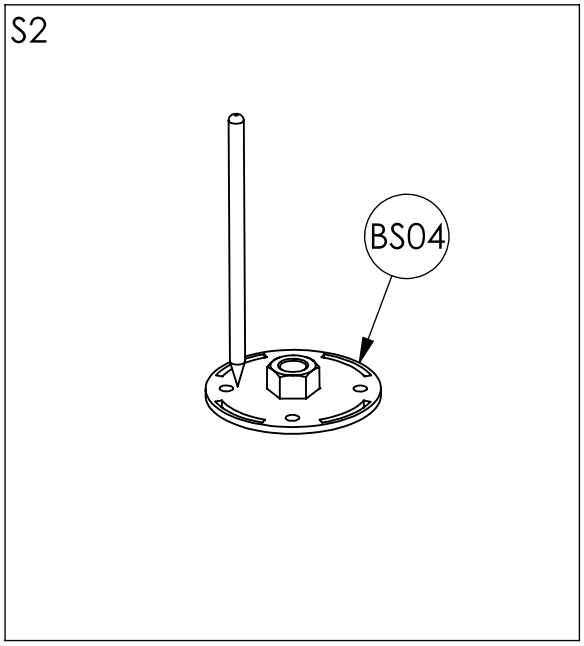
S2
BS04

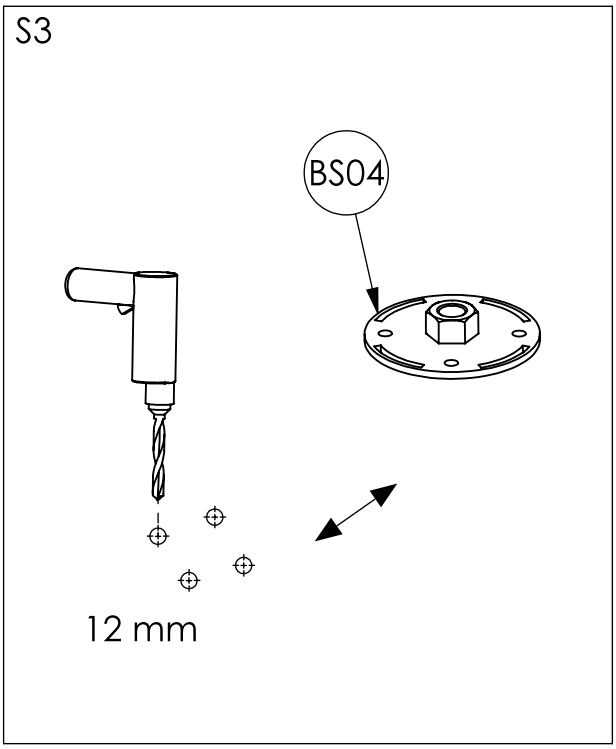
S3
BS04
12 mm

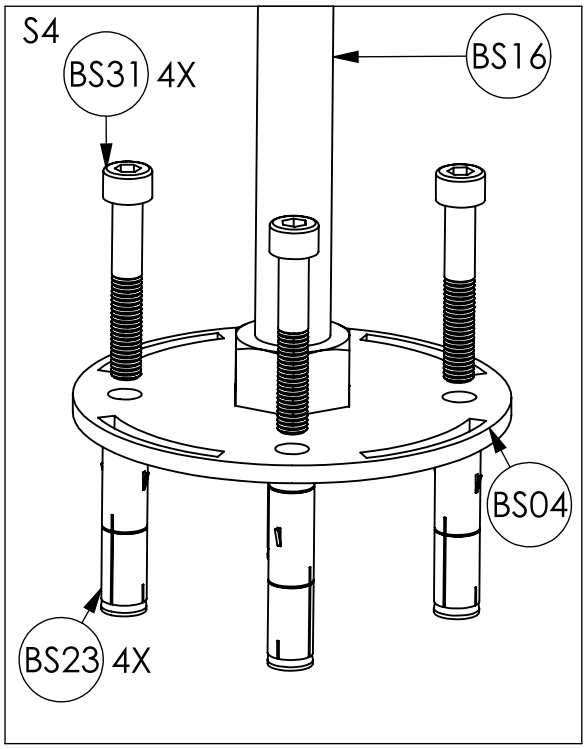
S4
BS31 4X
BS16
BS04
BS23 4X

4

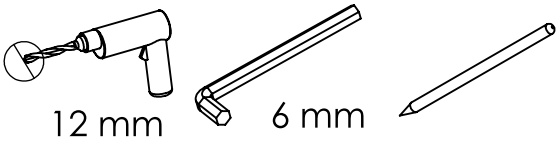
12 mm
6 mm

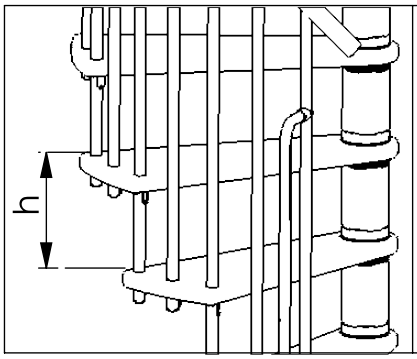

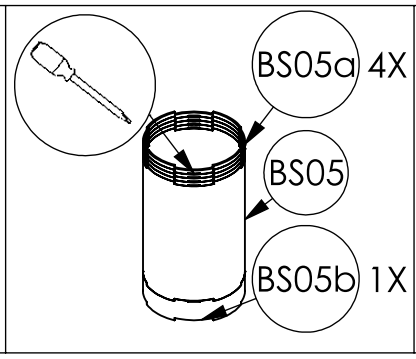

h	BS05a	BS05b
190 mm	0x	0x
195 mm	1x	0x
200 mm	2x	0x
205 mm	3x	0x
210 mm	4x	0x
215 mm	0x	1x
220 mm	1x	1x
225 mm	2x	1x
230 mm	3x	1x
235 mm	4x	1x

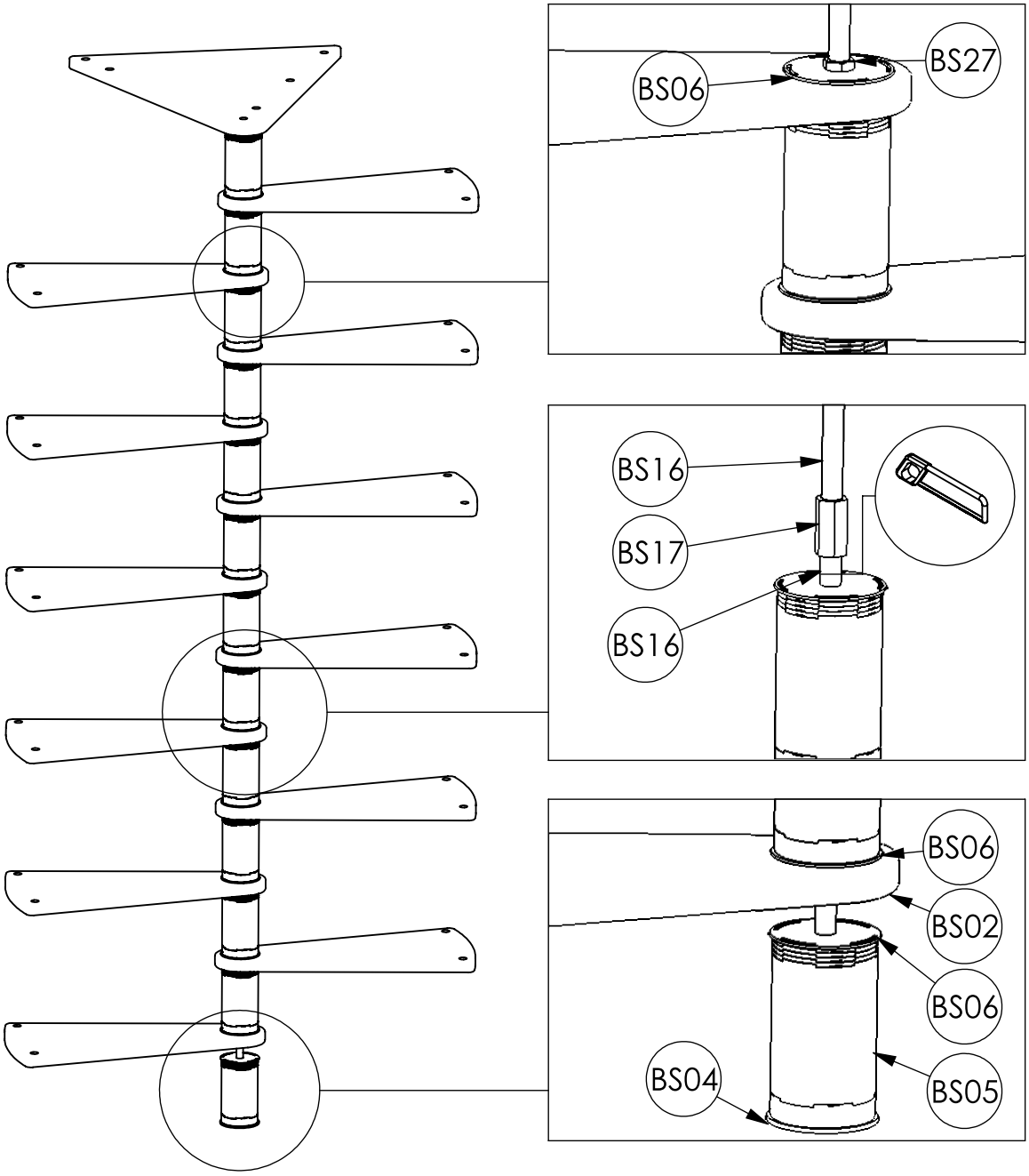

5

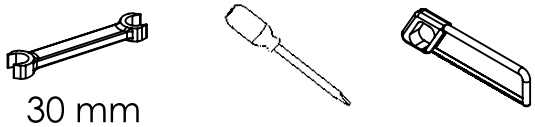

30 mm

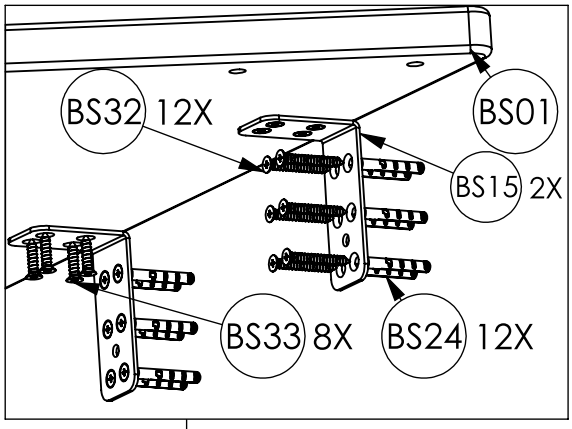
BS32 12X
BS01
BS15 2X
BS33 8X
BS24 12X

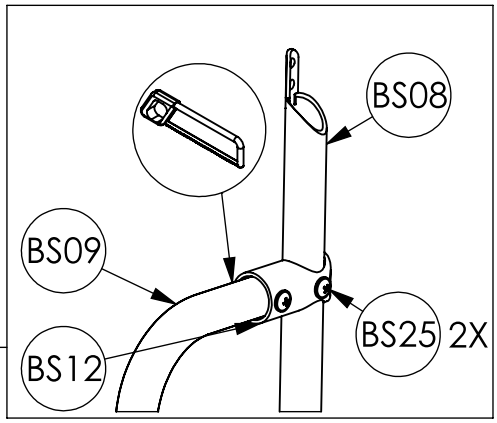
BS08
BS09
BS12
BS25 2X

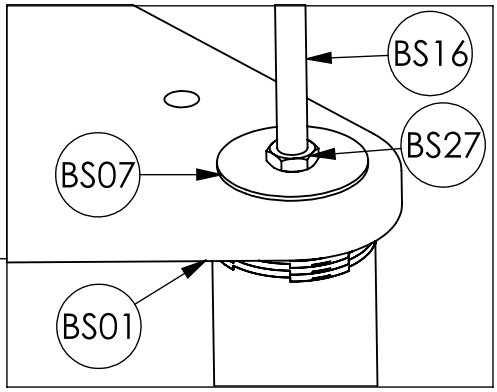
BS16
BS27
BS07
BS01

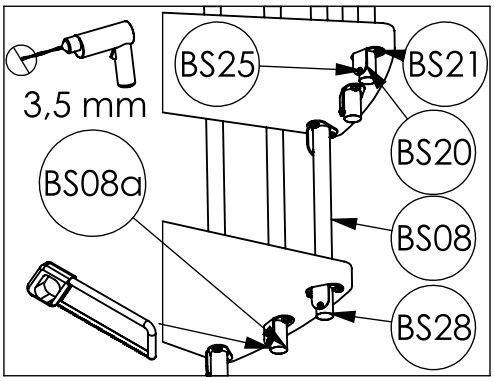
3,5 mm
BS25
BS21
BS20
BS08a
BS08
BS28

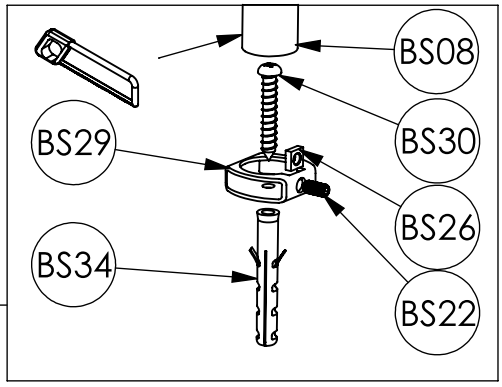
BS08
BS30
BS29
BS26
BS34
BS22

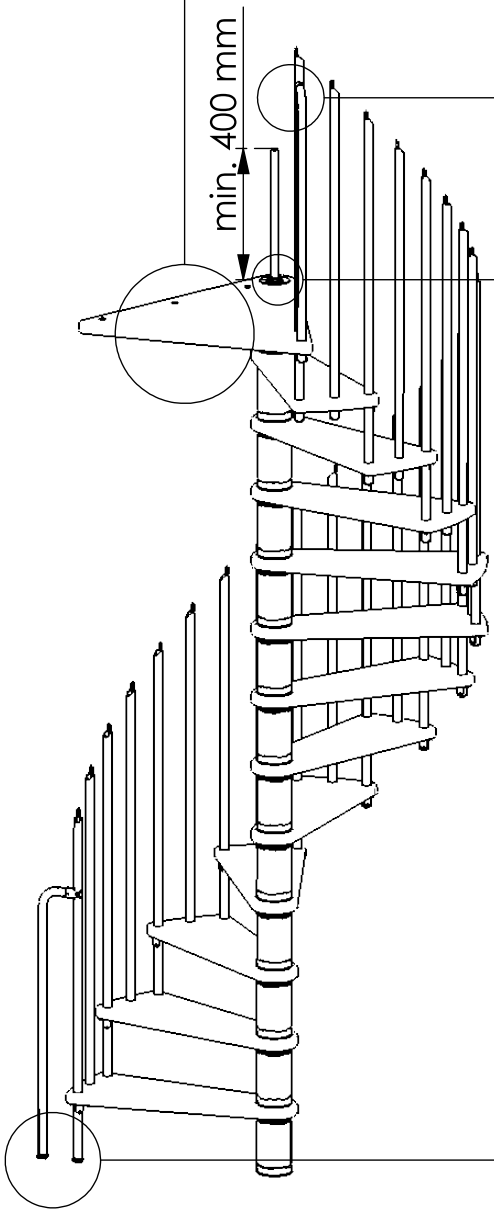
min. 400 mm

6

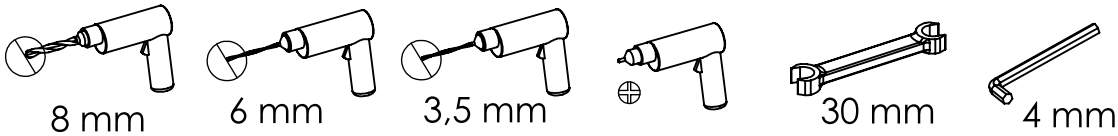
8 mm
6 mm
3,5 mm
30 mm
4 mm

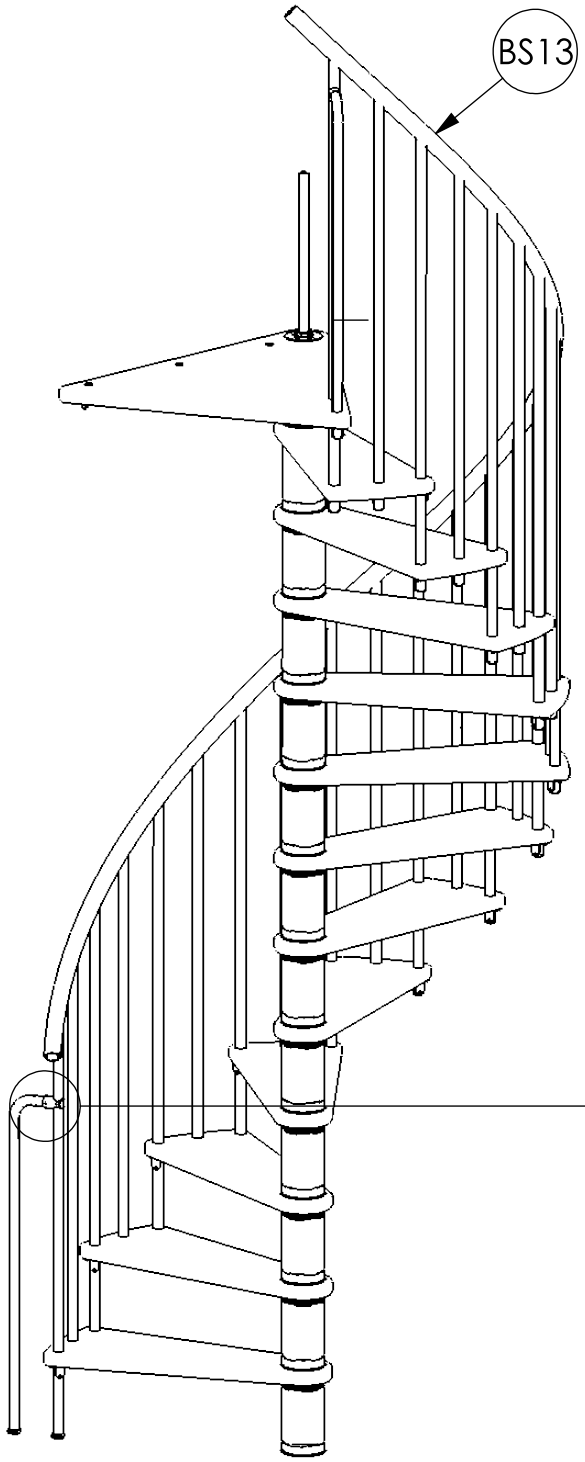
BS13

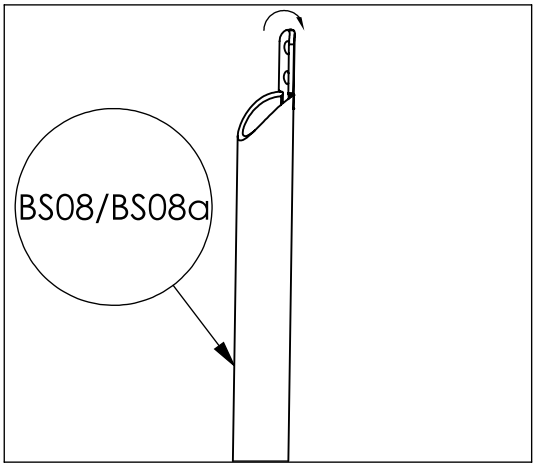
BS08/BS08a

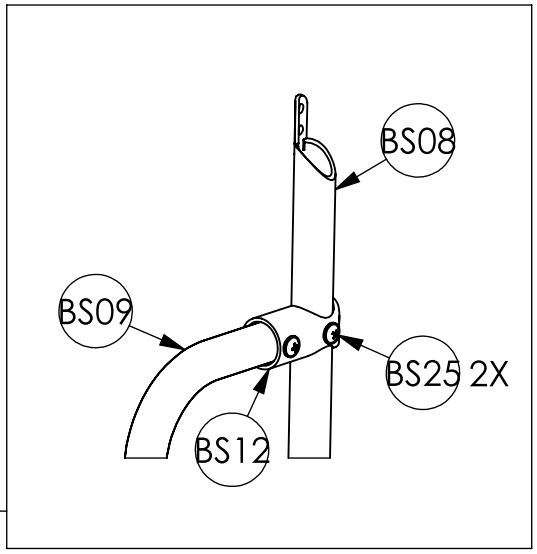
BS08
BS09
BS25 2X
BS12

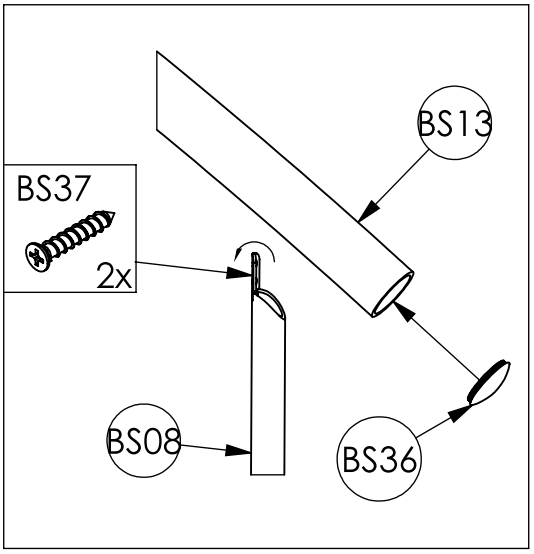
BS13
BS37
2x
BS08
BS36

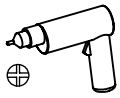

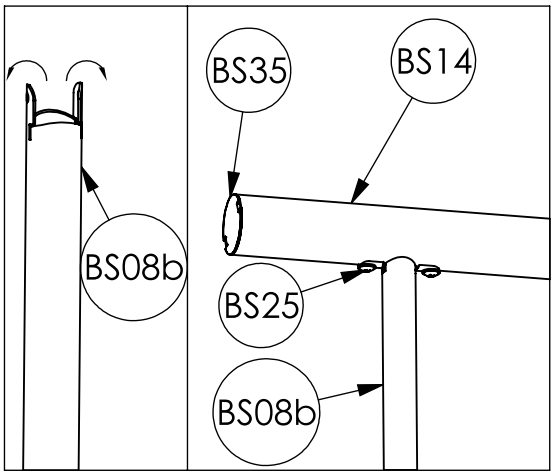
BS35
BS14
BS08b
BS25
BS08b

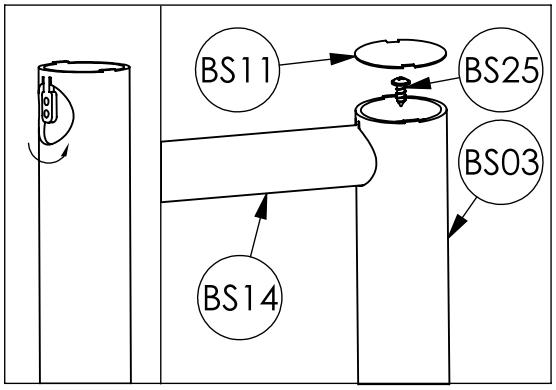
BS11
BS25
BS03
BS14

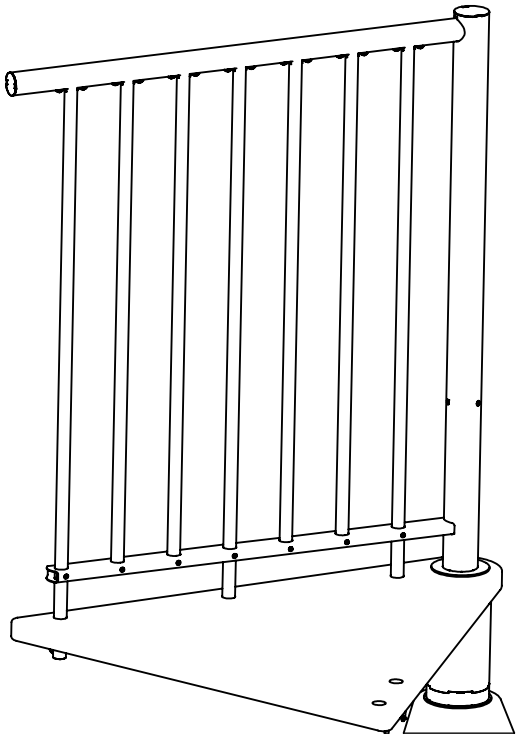

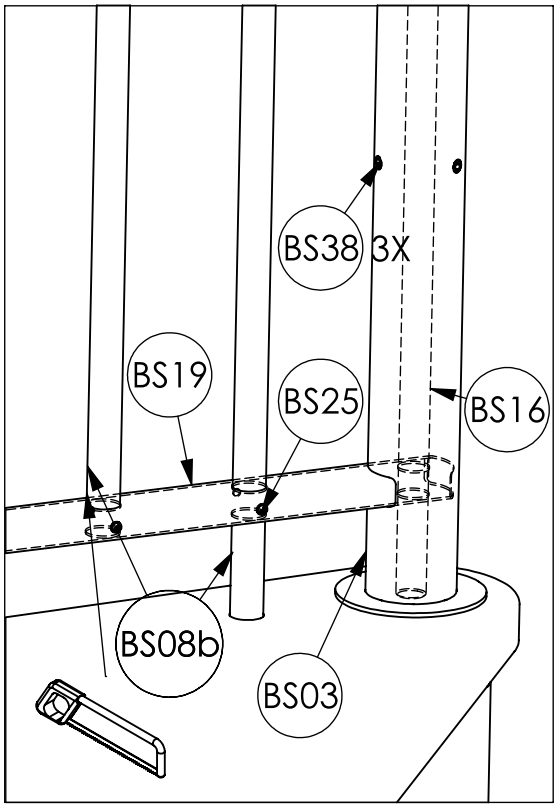
BS38 3X
BS19
BS25
BS16
BS08b
BS03

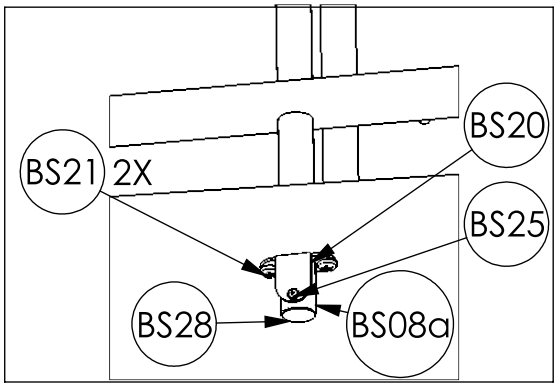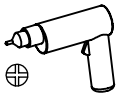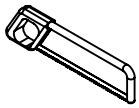
BS20
BS21 2X
BS25
BS28
BS08a