M570

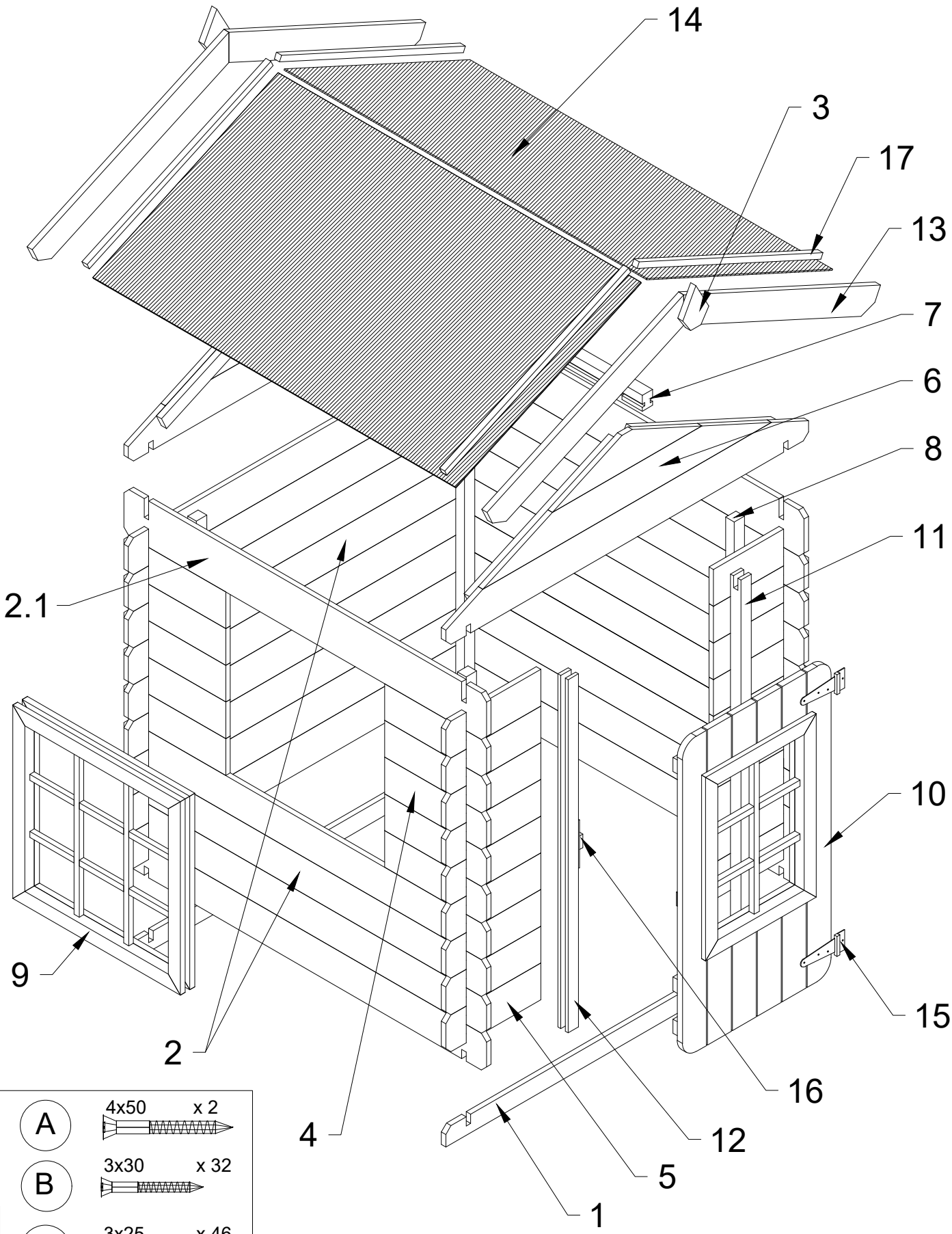

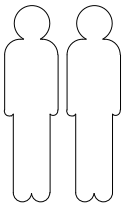

A	4x50	x 2
B	3x30	x 32
C	3x25	x 46
D	3x12	x 3
E	4.2x32	x 2
F	4.2x13	x 12

№		PCS	mm	mm	mm
1		2	13	46	1050
2		22	13	92	1050
2.1		2	13	116	1050
3		2	15	75	105
4		10	13	92	295
5		18	13	92	275
6		2		276	1050
7		1	30	40	1050
8		4	25	30	900
9		1		485	485
10		1		430	790
11		1	30	30	885
12		1		30	885
13		4	15	69	626
14		2		590	1047
15		2			
16		1			
17		4	15	15	585

1

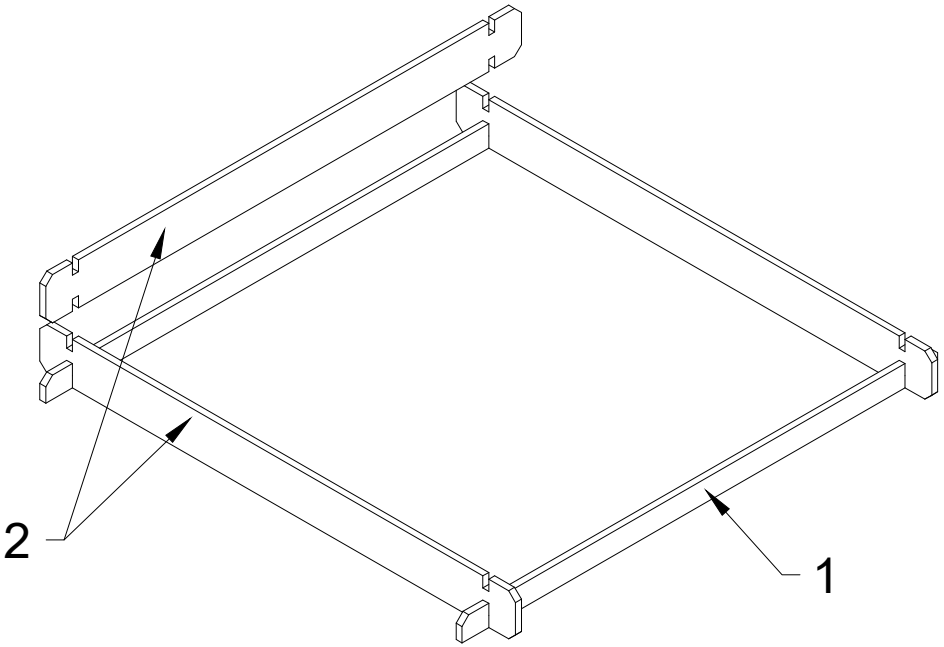
2
1

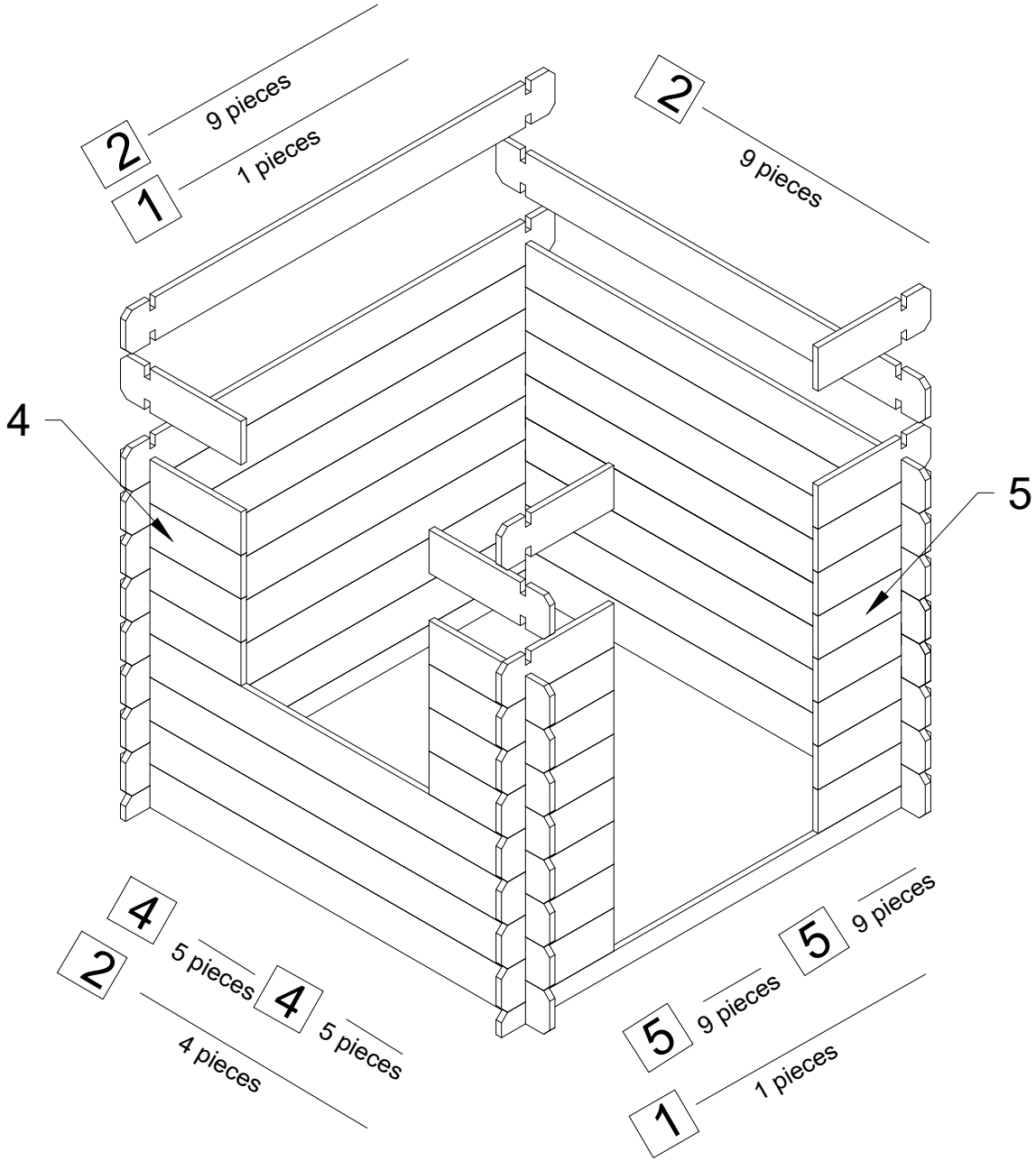
2
9 pieces
1
1 pieces
2
9 pieces
4
5
4
5 pieces
2
4 pieces
4
5 pieces
5
9 pieces
5
9 pieces
1
1 pieces

2

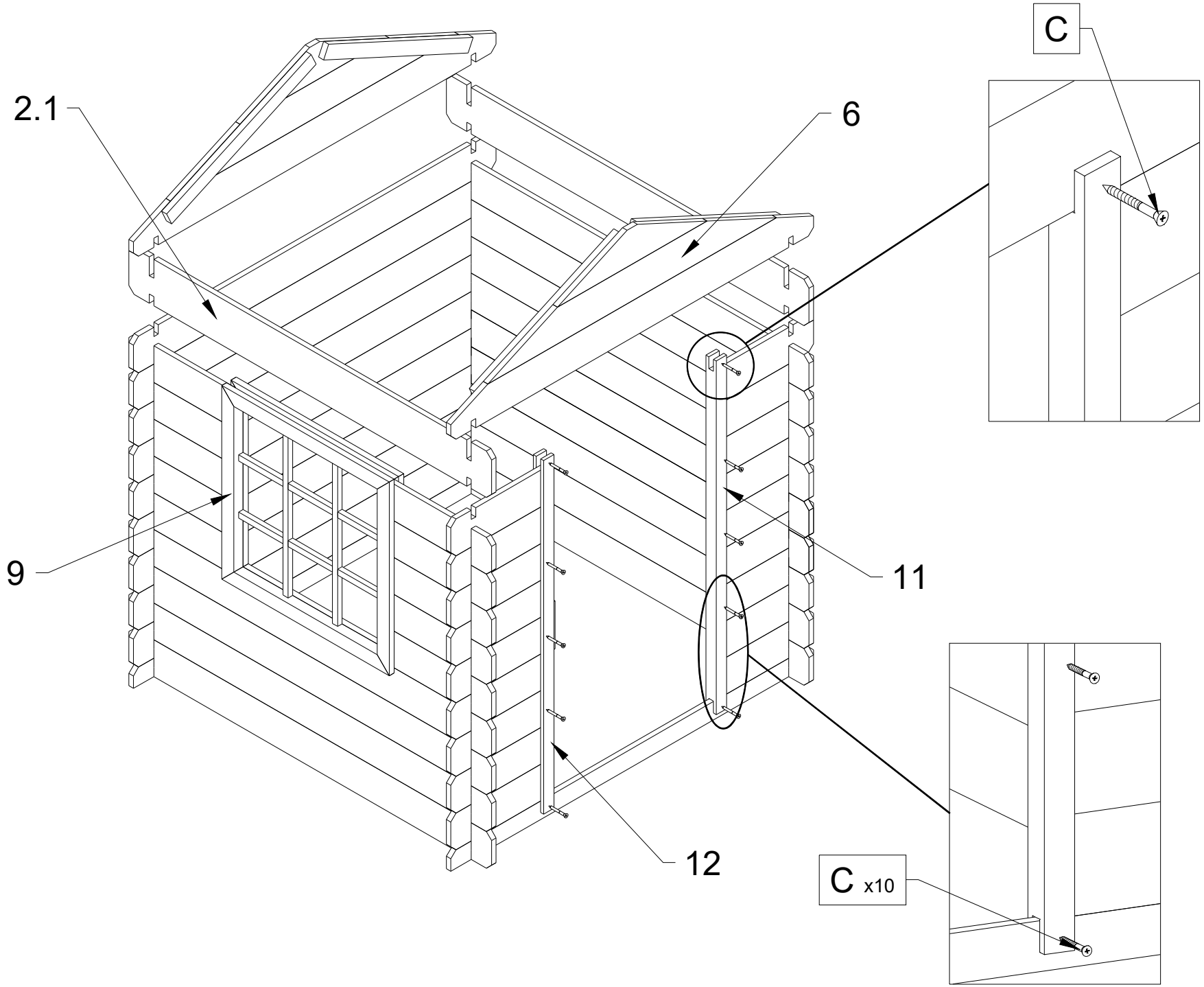

3

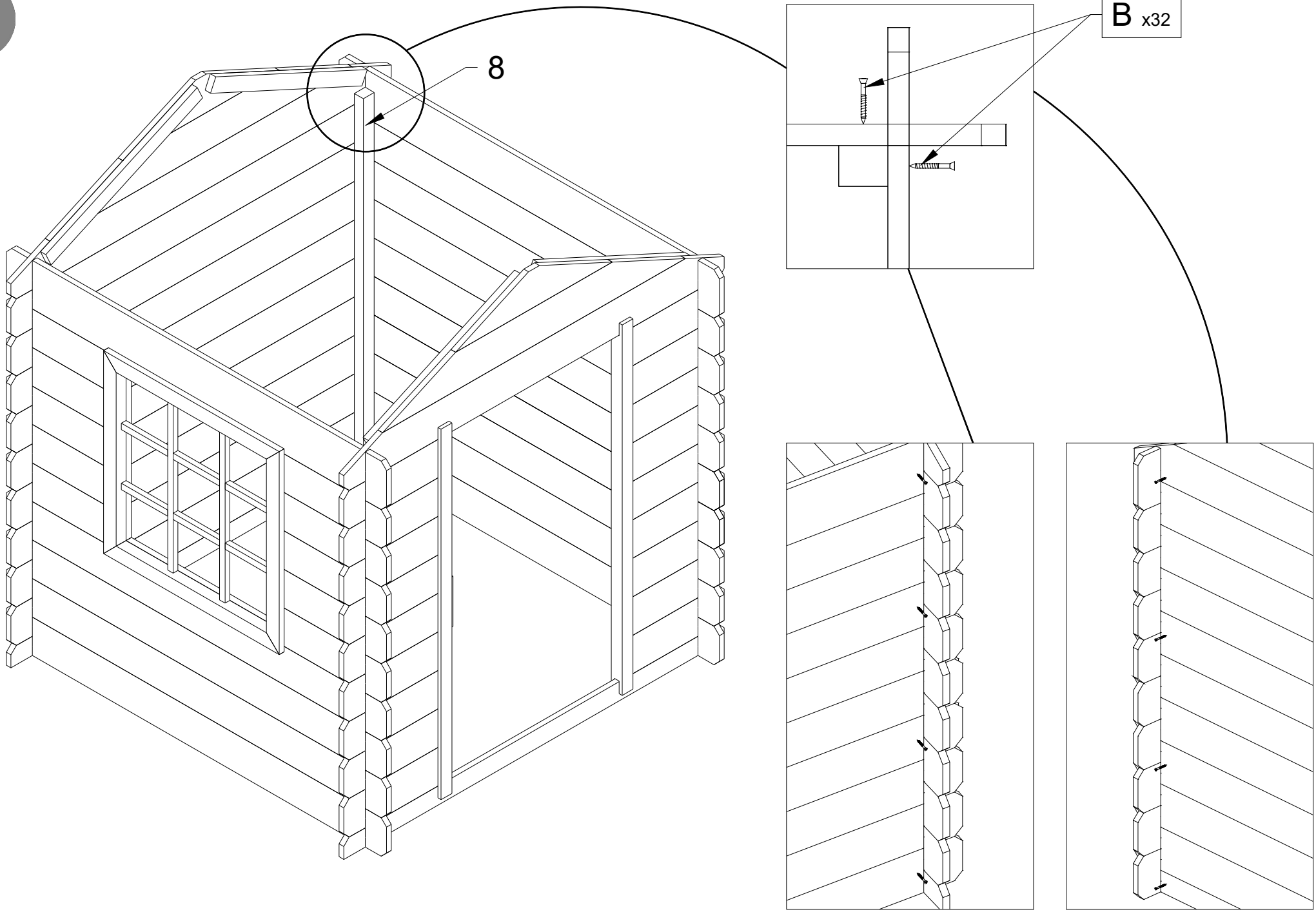

4

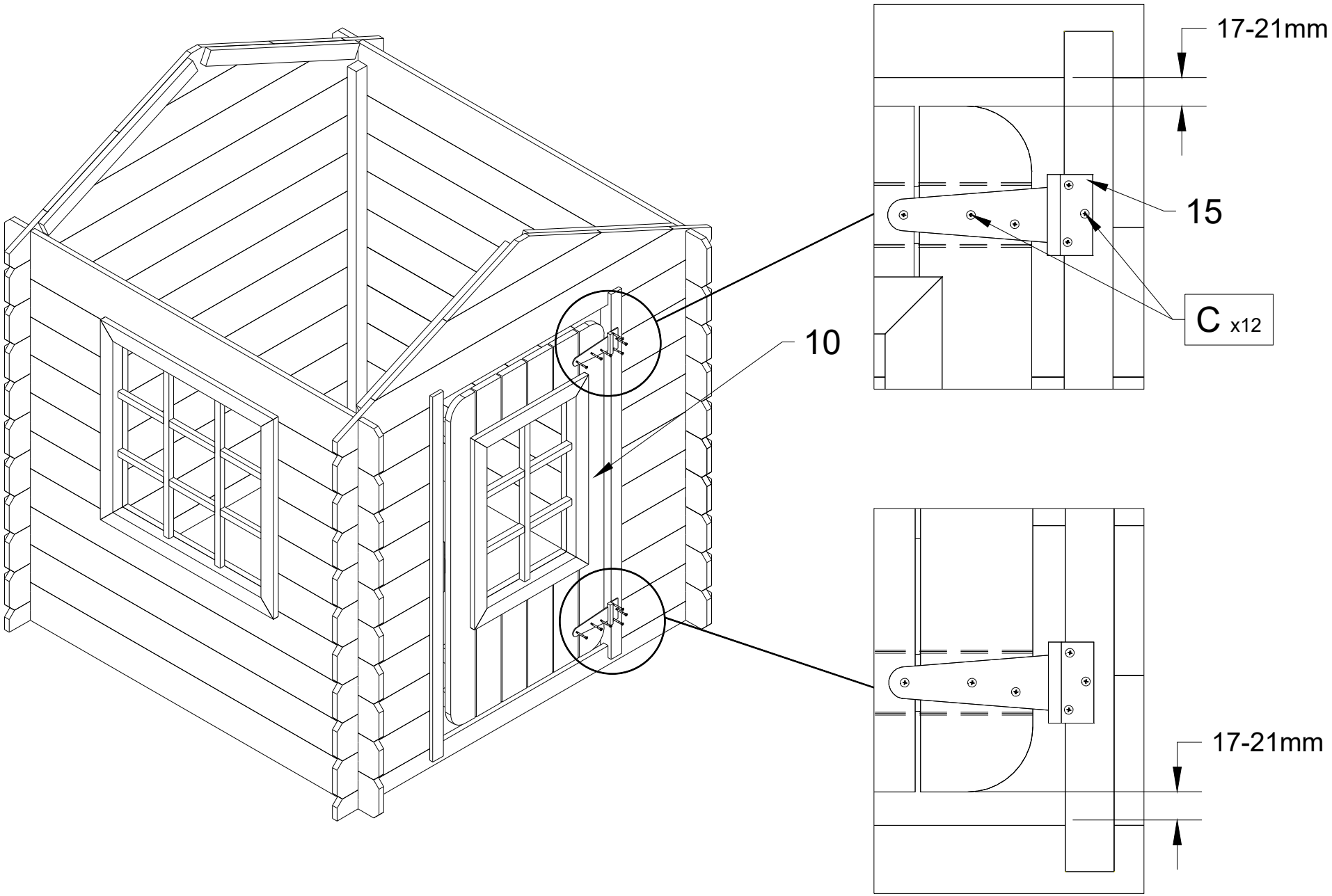

5

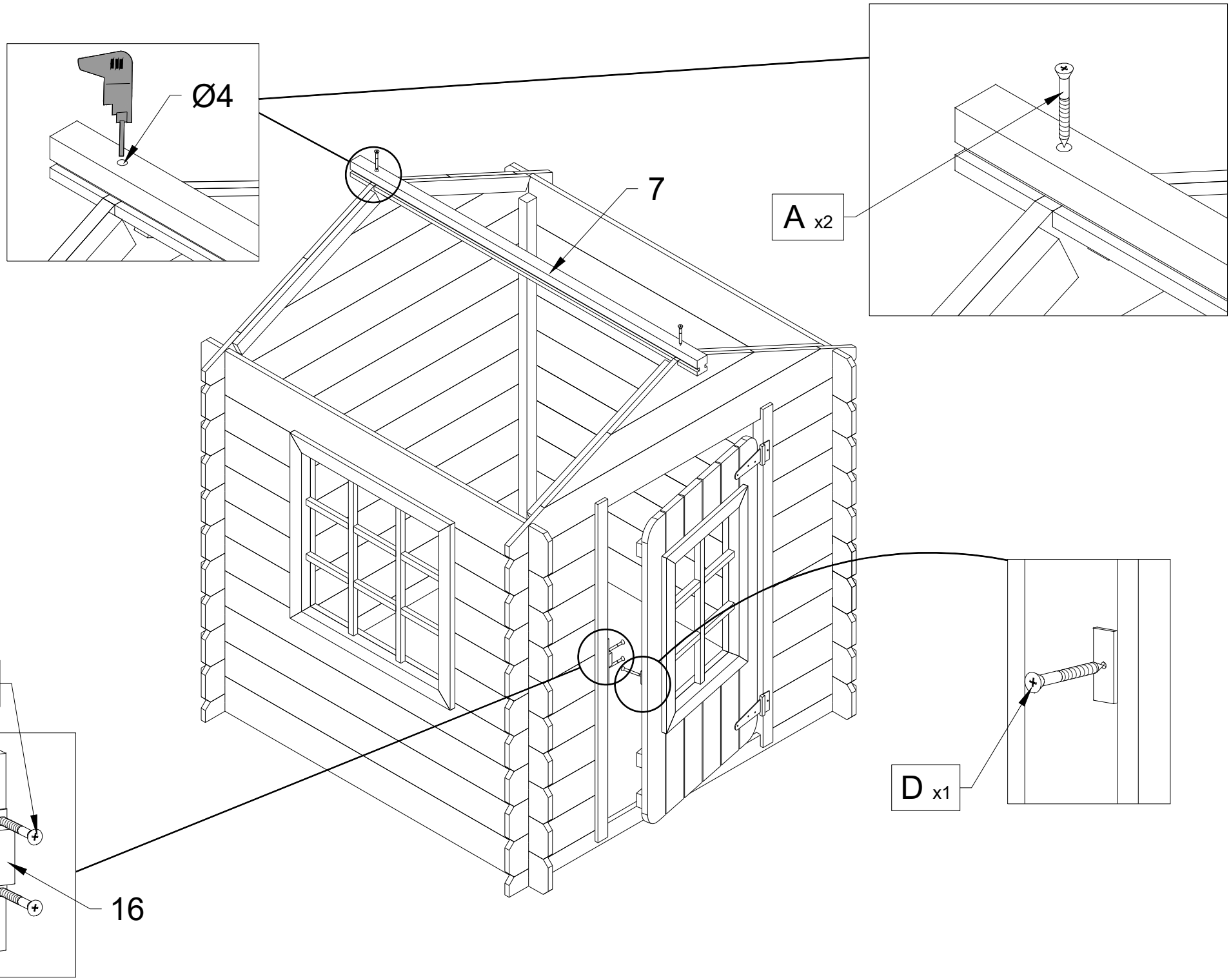

6

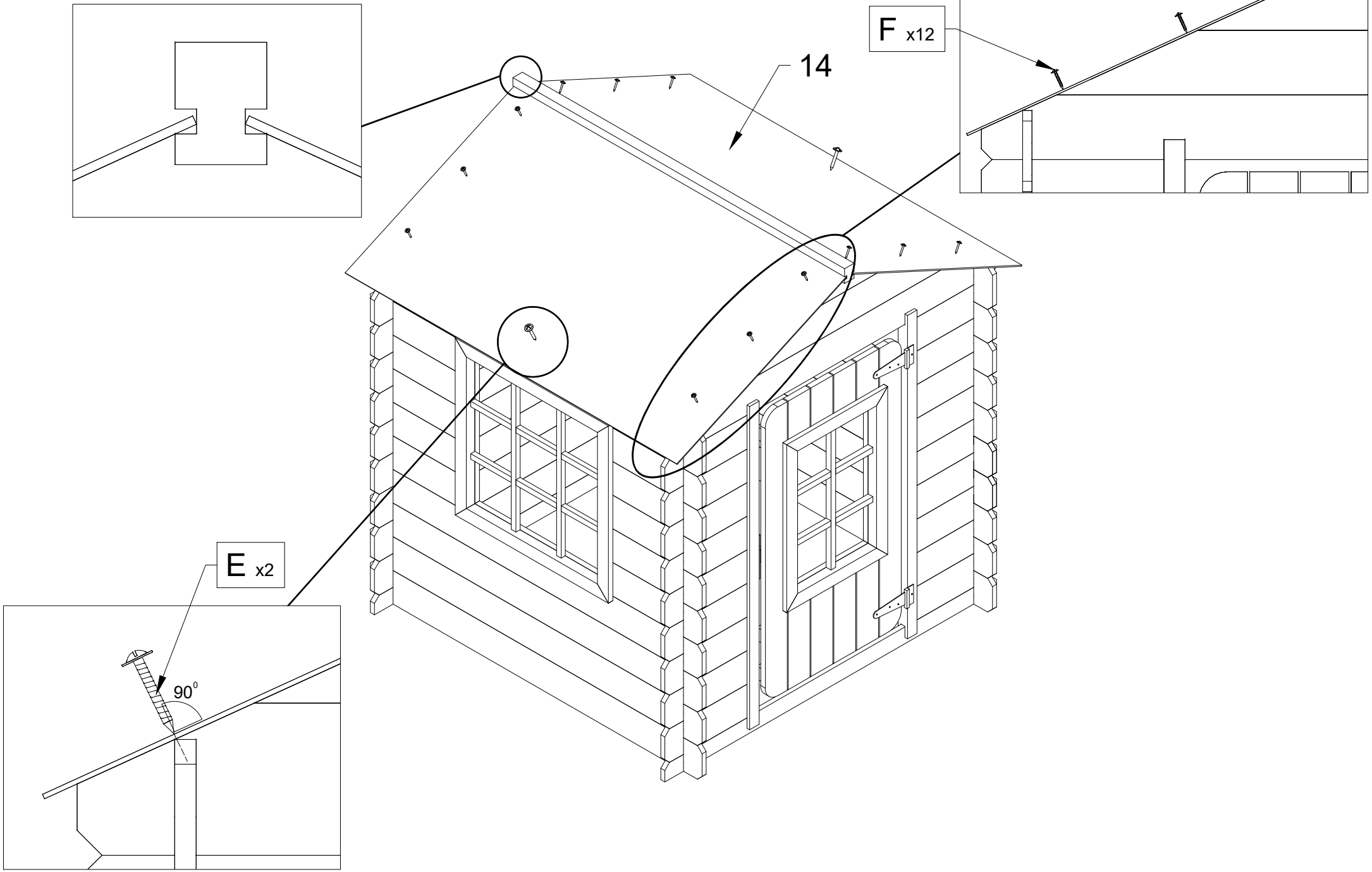
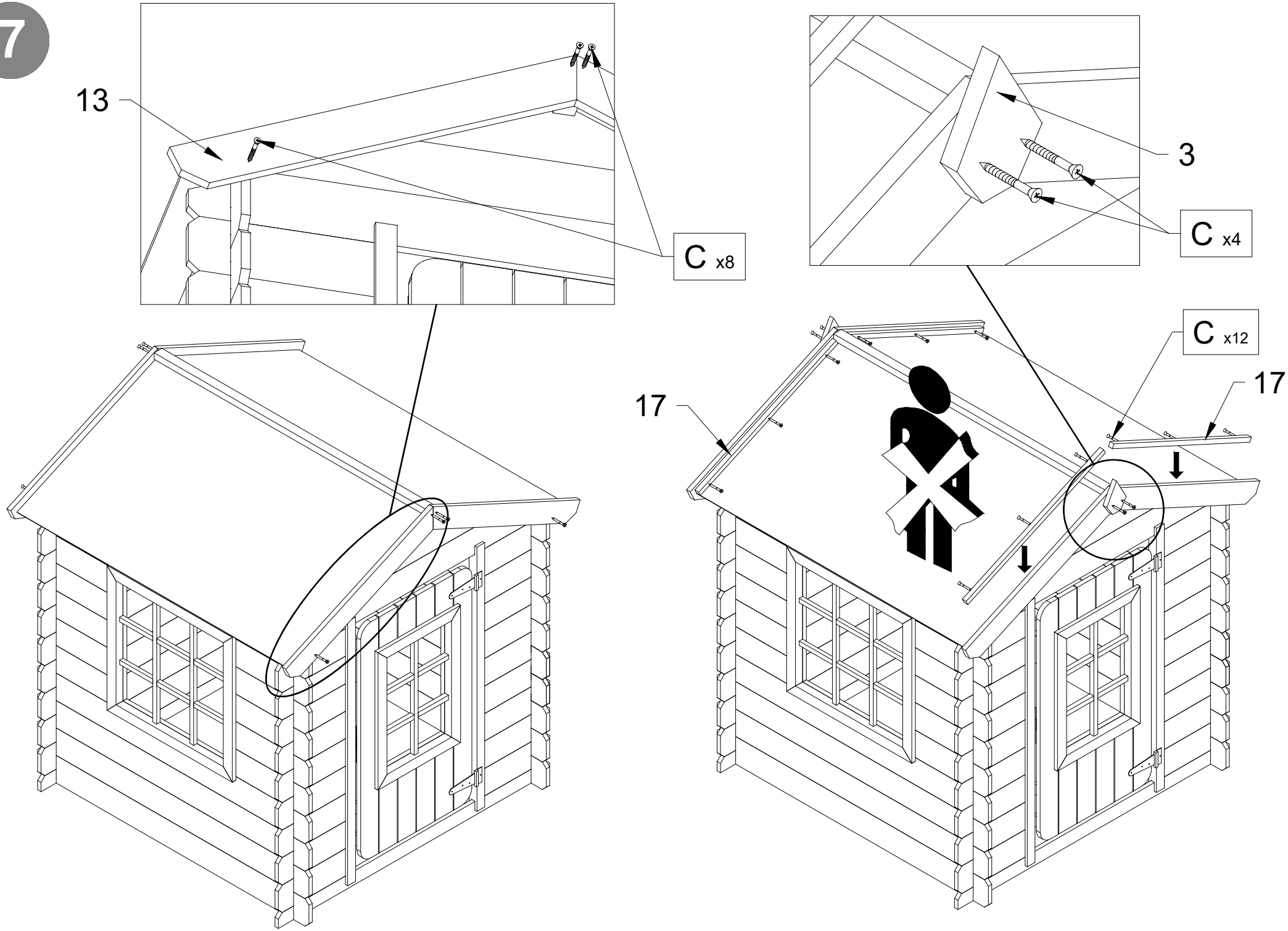
7