GAIA

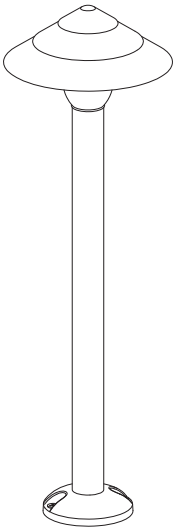

1/5

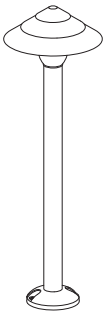

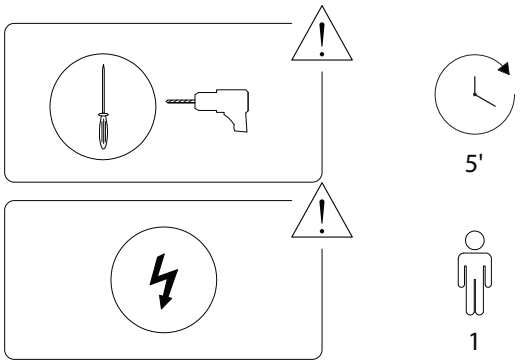

2/5

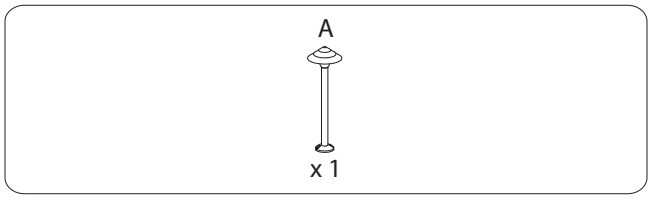

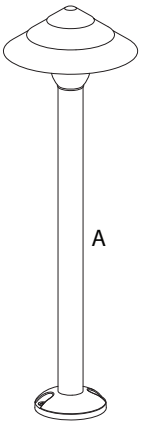

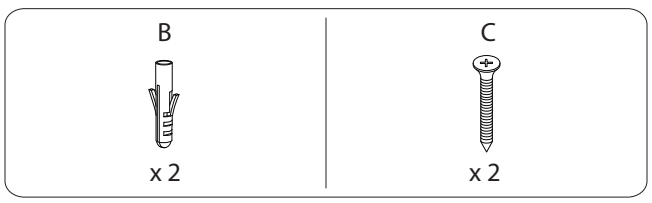

3/5

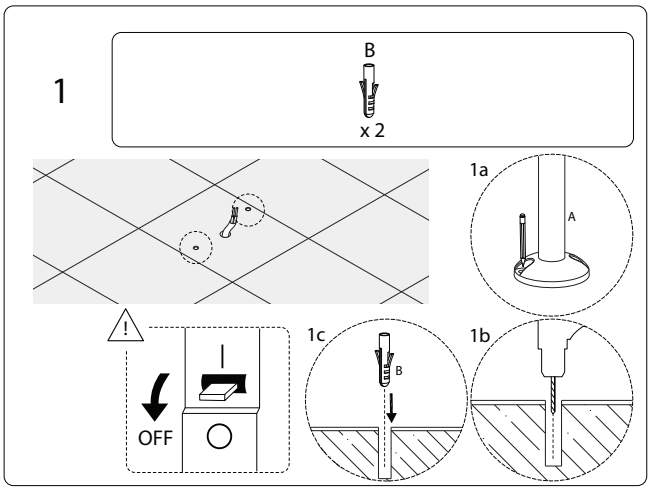

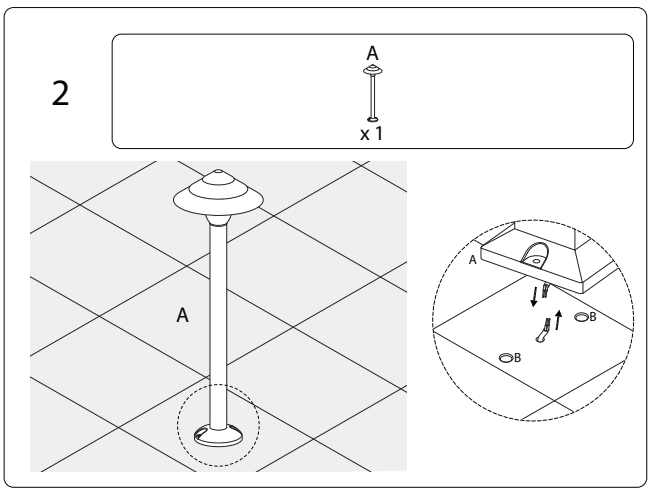

4/5

3

C

x 2

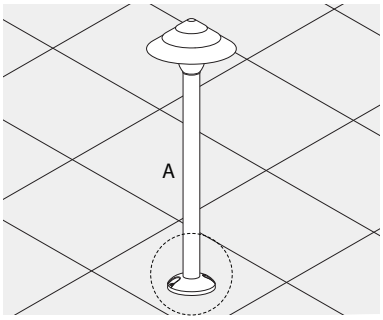

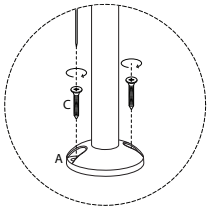

2886/GAIA/090926/