LOIRE

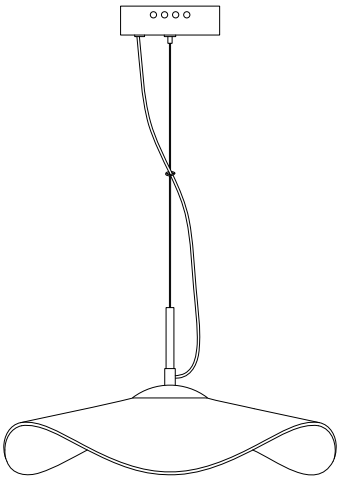

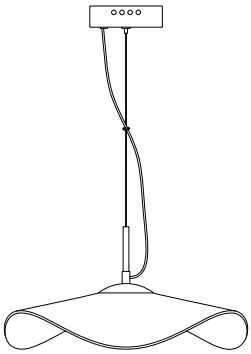

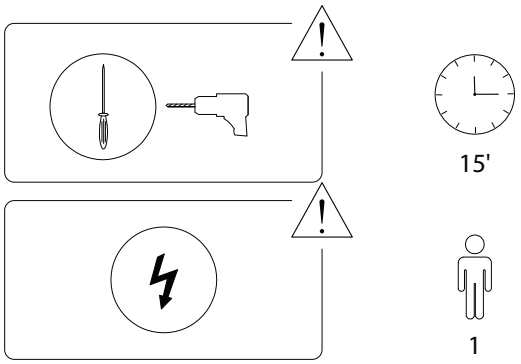

1/4

2025/LOIRE/270824/

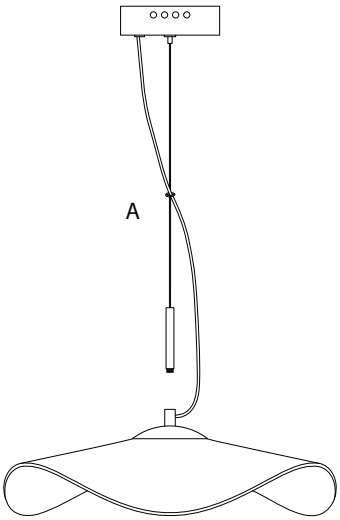

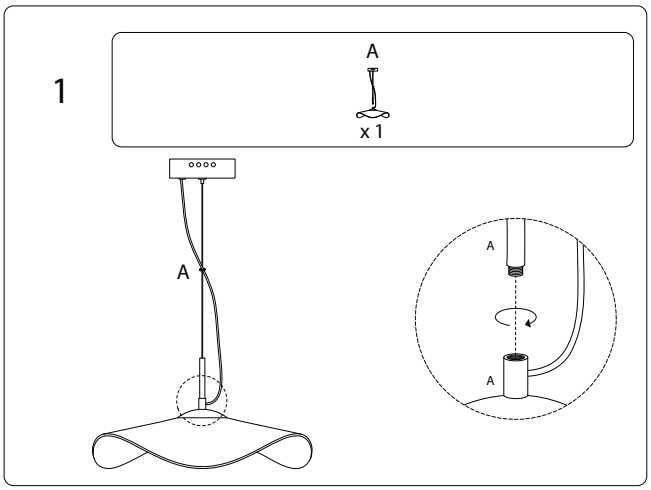

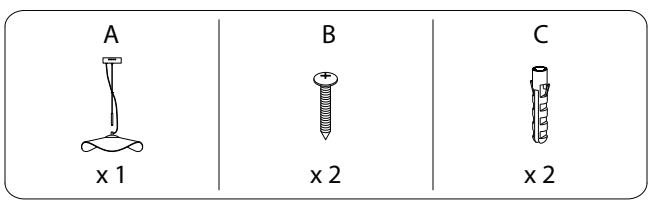

2/4

2025/LOIRE/270824/

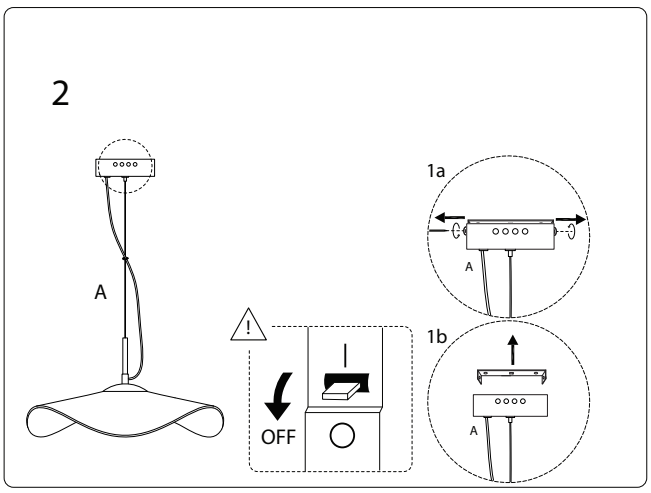

3/4

2025/LOIRE/270824/

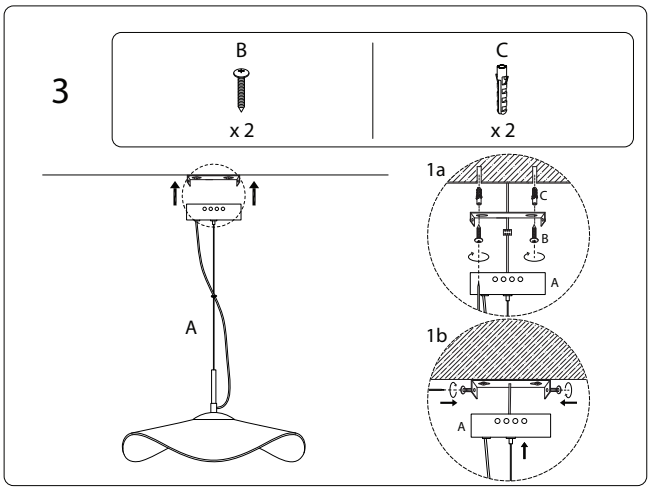

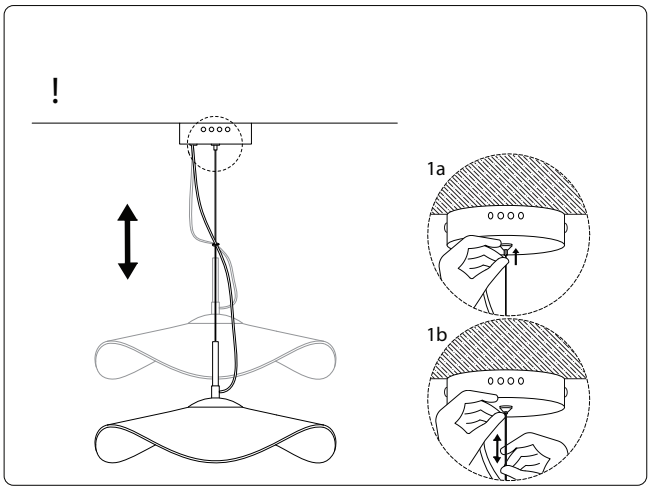

2025/LOIRE/270824/