EVENLODE

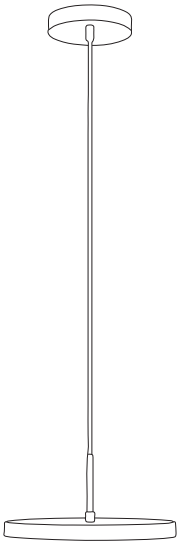

1/5

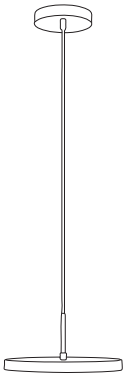

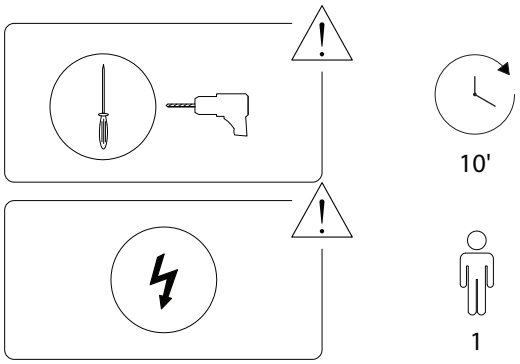

2/5

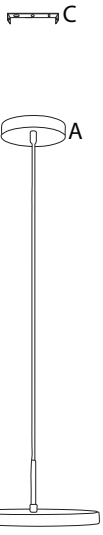

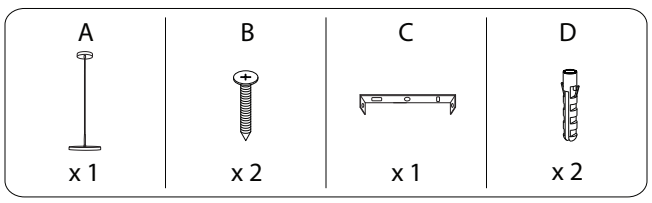

3/5

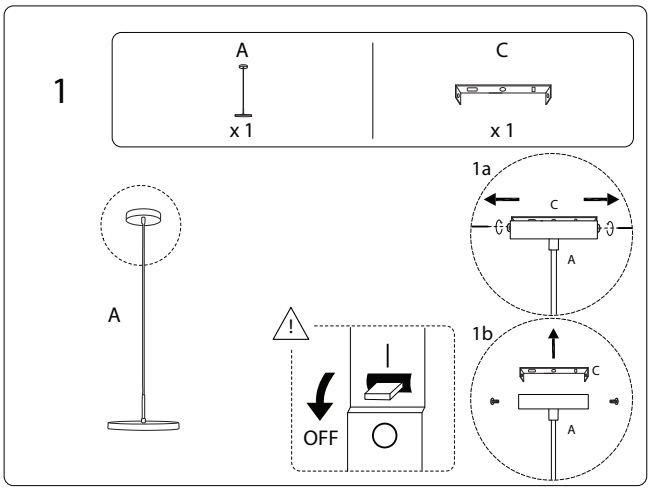

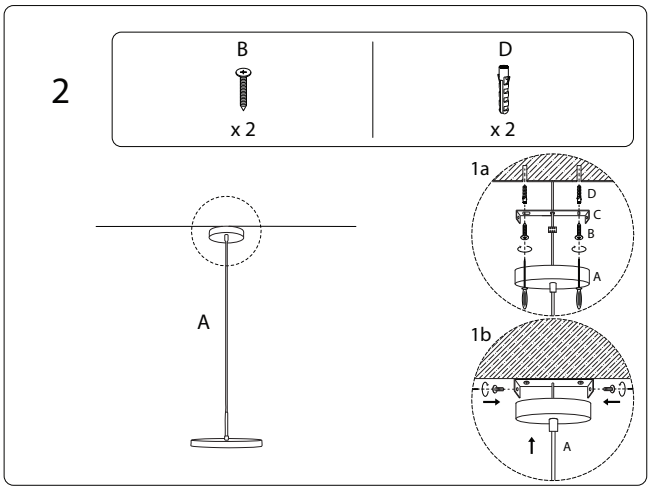

4/5

3140/EVENLODE/260826/

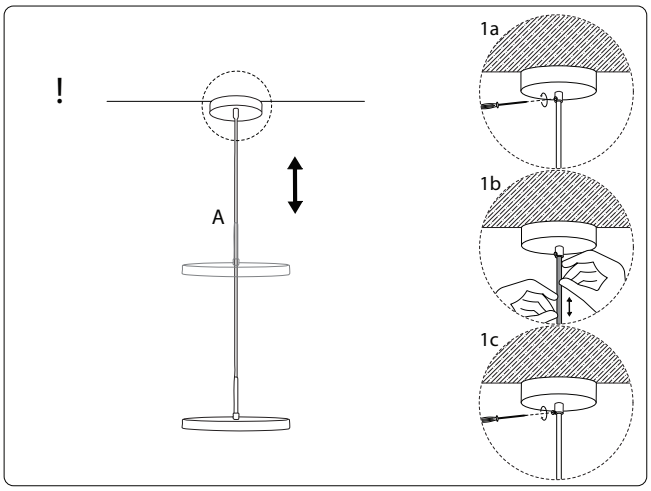

3140/EVENLODE/260826/