ROSALIE

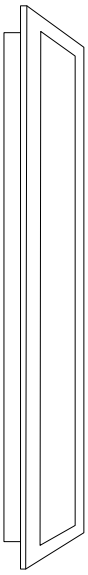

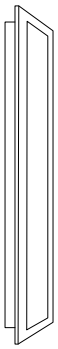

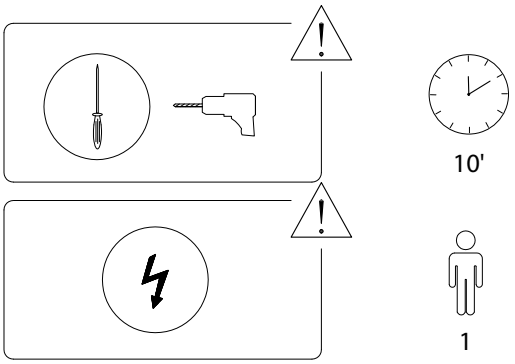

Beliani

1/4

Beliani

2020/ROSALIE 30_60/290823/

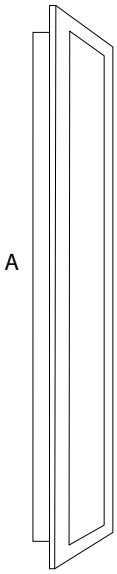

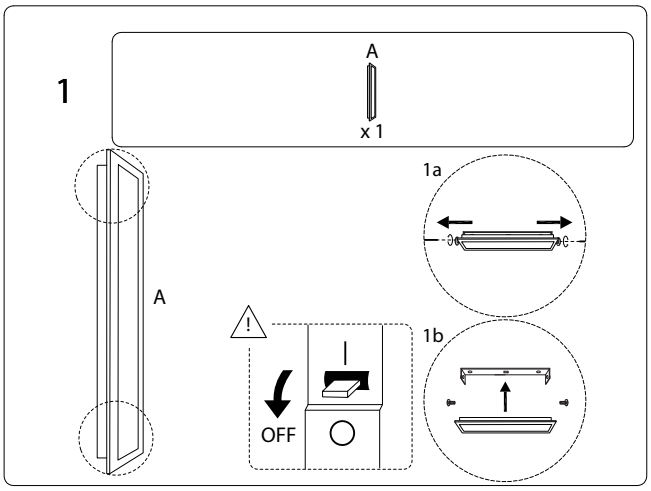

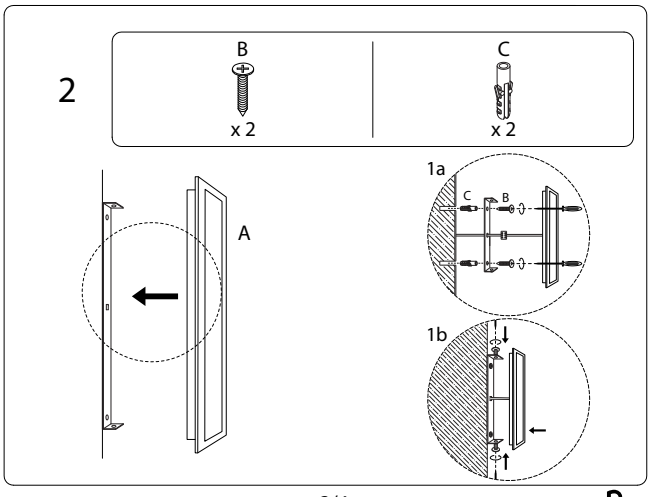

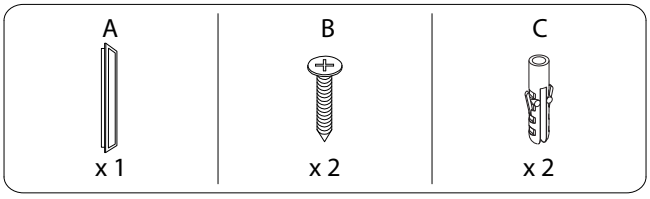

Beliani

2020/ROSALIE 30_60/290823/

Beliani

2020/ROSALIE 30_60/290823/