VULETAS

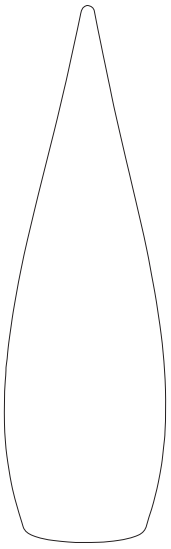

1/5

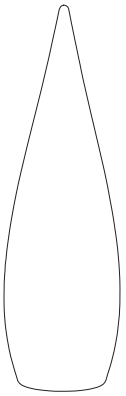

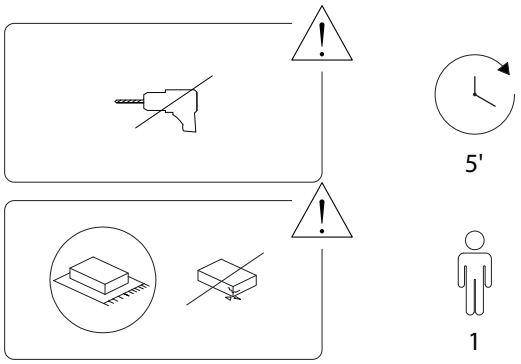

2/5

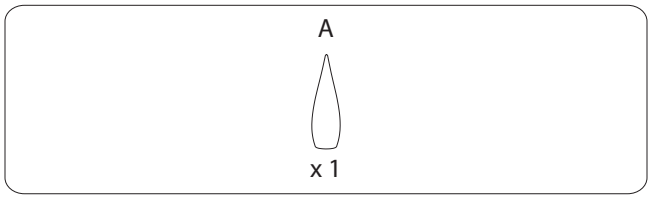

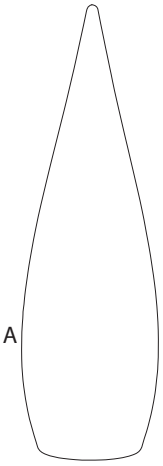

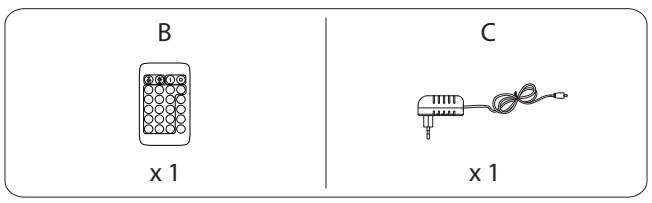

3/5

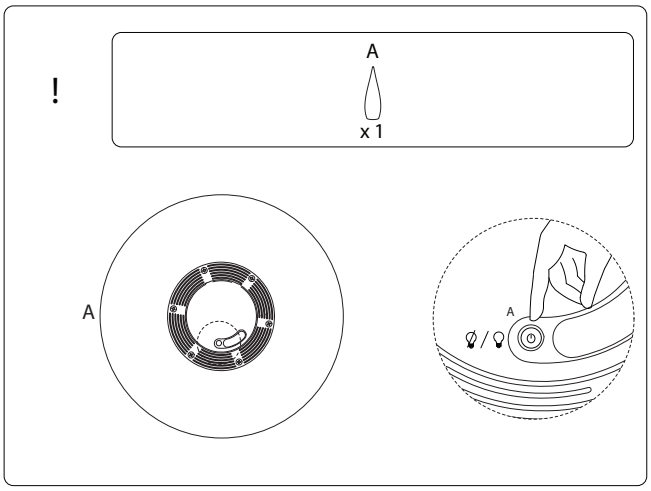

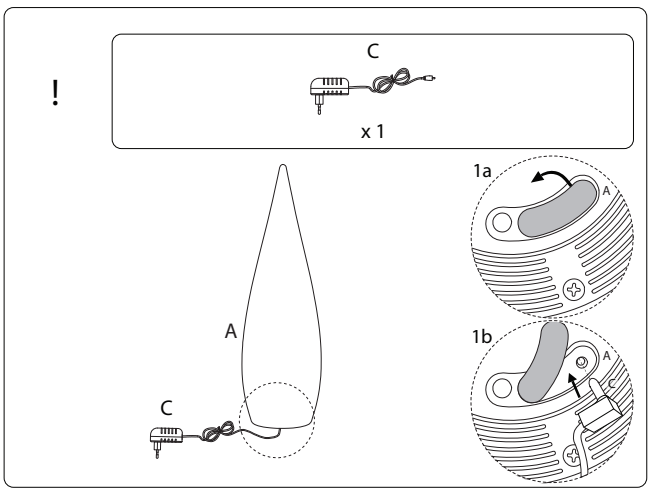

4/5

2317/VULETAS/080926/

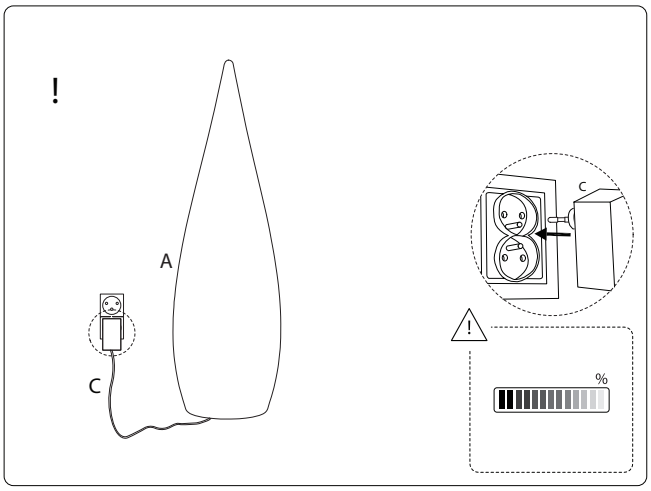

2317/VULETAS/080926/